Commercial Loan Prepayment Behaviors: Knowledge is Profit!

By William J. McGuire, Ph.D.,

President and CEO, McGuire Performance Solutions, Inc.

Term related outcomes for commercial loans are not always as expected. But the industry's understanding of underlying prepayment behaviors is limited. This white paper provides conceptual guidance, alternate measurement solutions, and examples of profit enhancing uses of quantified commercial loan prepayments.

Discussions are based on finance theory, business practice, and experience gained in recent statistical analyses of client commercial loan prepayment data by McGuire Performance Solutions, Inc. (MPS). The paper has a distinctively empirical orientation, justified by the institution specific nature of commercial loan prepayment activity. It focuses on behaviors at the category level because this is where profit related strategies are applied and asset/liability management (ALM) model inputs defined.

There are several reasons to study and quantify commercial loan prepayments. First and foremost is that knowledge has immediate profit potential. Quantified prepayment insights directly enhance financial decision making, support more precise liquidity position measurement, and result in better loan pricing decisions. Profits are further increased via more accurate ALM model inputs that add more precision to interest rate risk (IRR) analyses. This empowers management to avoid excessive caution – and lost profits - because the institution's true IRR level is known. The accuracy of funds transfer pricing (FTP) and profitability models is also upgraded. Finally, extensions of prepayment examinations such as segmentation analyses of specific loan attributes or borrower characteristics can identify areas of unique market opportunity and profit.

Fundamental Concepts - Commercial Loan Prepayments

Contractual maturity commercial loan categories[1] have a defined principal payment date but can and often do pay off prior to that. Prepayments, defined as either full or partial pay off prior to maturity date, are associated with these loans.

Many influences drive category level commercial loan prepayments behaviors; see *Exhibit 1* (in Appendix). The primary influence is the current "refi advantage" (the spread between average coupon rate and new volume loan rate). When

[1] Indeterminate maturity commercial loans (e.g. lines of credit or business credit cards) are a separate class of loans. The relevant term related measure for them is runoff, defined as the change in existing loan balances between two periods. To keep the discussions in this white paper focused, consideration of indeterminate maturity loans is not addressed here.

 © 2008 Financial Managers Society, Inc.

average coupon rate exceeds the new volume rate on replacement borrowings, there is a financial incentive to prepay. Whether action is taken by borrowers, however, depends on expectations of immediate future new volume rates (if lower rates are anticipated, prepayment may be delayed) and whether prepayment penalties exist and can be enforced.

The issue of penalty enforcement introduces borrower negotiating power as a commercial loan prepayment influence. Influential commercial loan customers are often able to demand penalty free early payoff when prepayment is to their economic advantage, on the threat of moving business elsewhere. While such outcomes are often denied, the empirical record is clear – fixed rate commercial loan prepayments tend to increase when interest rates fall.

There are other influences on commercial loan prepayments also. Seasonality is in some cases a factor. Improved business conditions may result in higher prepayments as borrower ability to pay increases. In variable rate loans, higher interest rates are often correlated with more prepayments as borrowers seek to avoid increased expense. Prepayments in one category can cause prepayments in other categories. These "echo effects" most often apply to line of credit type loans but other links are possible. Best practice is to analyze contractual and indeterminate maturity commercial loan payoff behaviors simultaneously.

Seasoning (i.e. older loans) and burn out (prior prepayment experience) are not often found to be category level commercial loan prepayment influences. This is because underlying loan pools are dynamically refreshed by new lending in each analysis period. Analyses of fixed loan pools, discontinued loan categories, or a category having just experienced significant prepayment activity may find these portfolio dimensions to be behavior influences.

Measuring Commercial Loan Prepayments

As the discussion above notes, there are many factors that potentially influence commercial loan prepayments. Finance theory and business practice can define a general representation of what could influence borrower actions. But they can not specify what will influence borrowers or at what magnitude.

The solution is to look to history. Borrowers have expressed their "revealed preferences" in prior periods by prepaying or not prepaying in the context of identifiable levels of potential behavior influences. By reading this record, history exposes true borrower behaviors. These can then be projected into the future.

A range of assessment solutions is available. Qualitatively reading the historic record provides general guidance as to future outcomes. Statistically quantifying history empowers management to forecast the future with greater precision, at current interest rate levels and across alternative rate scenario paths.

 © 2008 Financial Managers Society, Inc.

The best way to examine commercial loan prepayment measurement methods is to consider the two major types in a continuing case study. As all insights into the future of prepayments are based on history, the data are discussed immediately below. Considerations of each assessment method follow.

Data: Commercial Loan Prepayment Analysis Case Study

Prepayment studies can employ time series data of any length. But be cautious not to use information from periods so distant in time that borrowers are not representative of current loans. Prepayments are defined as the percent of a category's average monthly balances that paid off prior to contractual maturity in that period. Ideally the measure includes full and partial payoffs but in practice only full payoff balances can often be identified.

Category level information in each period is aggregated from loan record detail, obtained from underlying systems. To reduce the burden on systems personnel, in its analyses MPS normally asks for a dump of all loans in each month. This information is processed by MPS staff to calculate average balances and identify prepayments. Having loan level detail also supports drilling down into the data via segmentation analyses and other data mining type applications.

Exhibit 2 (in Appendix) presents prepayment related time series data for a typical commercial loan category (fixed rate, collateralized, 5 year maximum term, amortizing, with penalty for early payoff). Full payouts only are depicted, due to data imitations. This is not considered to be a material factor as partial prepayments on this type of loan are not common. The information presented is taken from a recent MPS statistical analysis, with small adjustments to ensure client privacy.

Prepayments by month are illustrated as bars, measured on the right hand axis. Calculated SMM values are converted to CPR format for ease of assessment. The red line is monthly portfolio yield (average coupon on existing loans) and the green line is each month's new volume rate. The refi advantage is the difference between the portfolio rate and new volume rate.

The initial task in prepayment analysis of any kind is to become acquainted with the data. The revealed preferences illustrated are the basis for all measurement applications and they often provide design insights for advanced analyses. The data also serve as a test of reasonableness for prepayment forecasts.

A first point of note from the *Exhibit 2* (in Appendix) data is that despite prepayment penalties prepayments are not zero! But they are not large, either, at about one-half percent per month overall (≈ 6% annually over the entire time series).

There are clear changes in prepayment activity levels over time, and the changes appear to be financially motivated. When the borrower refi advantage is strongly

 © 2008 Financial Managers Society, Inc.

negative in the first portion of the time series, prepayments are limited. As the refi advantage moves positive shortly after August 2007, prepayments accelerate sharply. A slight slowdown in prepayments is apparent late in the time series. This is correlated with a contracting refi advantage, but it may also occur because the stock of loans where borrower negotiating power can dominate has been temporarily depleted.

A unique seasonal pattern, significantly greater prepayments in November, is evident. The cause of this behavior needs to be established by management.

The patterns in the data place several mandates on measures of prepayments based on them. One, the Base Case (no change in interest rates) prepayment rate estimate needs to change as the prevailing interest rate environment and associated refi advantage changes. Second, prepayment estimates need to vary by interest rate scenario. Third, the seasonality centered on November needs to be recognized in all projections.

Qualitative Analysis of Commercial Loan Prepayments

The most common commercial loan prepayment measurement approach creates an average of recent historic experience. Future outcomes are then assumed to replicate prior experience. An average of any time span can be easily created. But what time frame to assess? Use the whole time series? Or just the most recent periods? What about using only periods where interest rates and the refi advantage are similar to current conditions?

Unfortunately, the choice usually matters. A 6.09% average CPR, for example, is associated with prepayments over the full time series in *Exhibit 2* (in Appendix). For just the pre-August 2007 time span the CPR is 4.90%. From August 2007 forward, the CPR is 8.87%. Prepayments in the last 3 months have a CPR of 9.20%, but that is declining. What is the right prepayment estimate?

The answer, of course, is to select time periods that are relevant to current decision making and IRR analysis. A rough future looking guess for Base Case would favor the prior 12 months figure, on the expectation that the refi advantage will continue to diminish. The question of what to use for rising and declining alternate scenarios is not directly answerable. Again as a rough guess, the prepayment rate prior to August 2007 would be a decent proxy for declining interest rate scenarios. In the same vein, an average of the last 3 (or last 6) months is reasonable for rising interest rate scenarios.

Approximation level commercial loan prepayment estimates of the type defined above are the most common measures used in the industry, based on MPS experience verifying ALM models and liquidity oriented contingency funding plans. Another source of prepayment inputs is also regularly encountered, however. These are estimates produced by internal ALM model applications that use prepayment experience from the prior 12 months to calculate category level

 © 2008 Financial Managers Society, Inc.

prepayment inputs. This qualitative analysis produces only a single average prepayment estimate, usually referred to as Base Case. Users are expected to adjust this input themselves in rising and declining interest rate scenarios, if considered applicable. ALM model prepayment inputs are normally updated on a rolling 12 month basis, each time the model is run.

Any simple averaging approach to prepayment analysis, including ALM model produced 12 month rolling averages, carries a set of serious handicaps. There is only a single prepayment estimate produced; it must be applied in all future periods. The estimate does not fully reset to new interest rate and borrower refi advantage conditions in each period. Nor does it offer guidance for varying prepayments in alternate interest rate scenarios. It also fails to accommodate seasonality (the average can, in fact, be seriously distorted by an outlier period). The precision of balance sheet decision making and accuracy of ALM model forecasts based on such inputs are much reduced by these shortfalls.

The limitations of analyzing commercial loan prepayments with simple averaging techniques are most evident in an environment of rapidly changing interest rates. Consider *Exhibit 3* (in Appendix). The time line at the top of the exhibit shows the track of short term interest rates from 12/31/07 through 04/30/08. In total, the Fed cut interest rates by 250 basis points (bp) in a four month period.

Actual CPR values (from *Exhibit 2* in Appendix) are listed in the upper data area in *Exhibit 3* (in Appendix). Commercial loan prepayment activity accelerates over time as the cumulative effects of the Fed's interest rate reductions added up (this pattern will continue to produce CPR's of almost 10% by early Summer 2008).

Corresponding ALM model rolling 12 month average prepayment estimates are listed in the lower data area in *Exhibit 3* (in Appendix). These estimates always understate prepayments and they lag in adapting to changing conditions. The estimates start too low in 12/31/07 because the averaging period includes the now distant history from early 2007, when prepayments were much lower. The rolling 12 month estimates lag in catching up with the advancing actual commercial loan prepayments over time for the same reason – historic behaviors that are no longer relevant continue to be a large portion of the 12 month data averaged. The 12 month rolling average prepayment estimates will eventually catch up, but with a very long lag.
Financial managers setting second quarter 2008 balance sheet strategies using performance and risk analysis based on rolling 12 month average commercial loan prepayment rates would be making their decisions in the context of an over-stated remaining term and understated liquidity contributions. That is not good.

Further, the answers do not get any better when commercial loan prepayments slow down (as is already happening by mid-2008). The 12 month rolling average estimates produced later in the year will overstate prepayments, and continue to

 © 2008 Financial Managers Society, Inc.

do so until the data from 2008 is beyond the scope of the averaging. More inaccurate prepayment measures and poor financial decision making result.

To be frank, simple averaging based measures prepayments are correct only during long periods of constant interest rates, stable loan pricing, and unvarying borrower behaviors. A rare confluence!

Quantitative Analysis of Commercial Loan Prepayments

Limitations associated with simple averaging type prepayment estimates arise because they lack a dynamic predictive capability. A recently developed advanced prepayment measurement methodology, based on statistical analysis of historic data, produces commercial loan prepayment estimates that overcome that limitation. Because advanced methodology estimates have comprehensive predictive capabilities, they meet all best practice requirements. That is, they are institution specific, they can reset in each period to new levels reflecting current interest rates and refi advantage, and they dynamically change across interest rate scenarios where this is applicable.

Advanced methodology commercial loan prepayment estimates are able to meet best practice mandates because they are equation based. This provides the flexibility to incorporate multiple influences into prepayment forecasts in any period. *Exhibit 4* (in Appendix) provides a schematic of the statistical analysis and forecasting processes underlying advanced methodology prepayment estimates. The action starts with the data illustrated in *Exhibit 2* (in Appendix). Additional information on other potential commercial loan prepayment influences is also collected, for example seasonal measures, other potential influence rates, and economic conditions.

The available data elements define initial listings of all potential prepayment influences. Statistical techniques are used to determine which of the potential influences are in fact a significant prepayment driver in the time series analyzed. The resulting predictor equations include only those influences statistically linked to commercial loan prepayments. The magnitude of the relationships is indicated in the coefficient on each influence. By defining the level of each influence (the independent variables), forecasts of commercial loan prepayments (the dependent variable) are produced to any specification. Outputs are period and scenario specific. That is, the equation based prepayment estimates are unique in each future time period forecast, in all rate scenarios.

There are many moving pieces in the statistical processes employed to produce equation based prepayment estimates and for the sake of brevity these will be reserved for future discussion. A better way to understand the advantages of the approach is to review prepayment forecasts produced using it in the case study. See *Exhibit 5* (in Appendix).

 © 2008 Financial Managers Society, Inc.

The time line and the first two data areas are repeated from *Exhibit 3* (in Appendix). The lower data area presents commercial loan prepayment forecasts produced using the equation estimated by a statistical analysis of the data in *Exhibit 2* (in Appendix) and additional information. Unique new prepayment forecasts produced are in each month, using the estimated equation in context with period specific influence inputs.

The 12/31/07 prepayment estimate is close to the actual prepayment level in that period. This is because 12/31/07 coupon rate and new volume rate (and other factors) are recognized by the equation and the prepayment estimate adjusts to those levels. The 12/31/07 forecast value is below the actual, though, perhaps not surprising given the unprecedented increase in prepayments just prior to year end 2007. Regular back testing of forecasted versus subsequent actual prepayment data is suggested to monitor such circumstances.

The forecasted commercial loan prepayment estimates reset in each month, converging closer to actual outcomes as the equation fully adjusts to conditions. Forecasted prepayment rates in future Base Case (flat interest rates) months predict rising activity levels for a few months and then level out. Forecasts of prepayments in alternate rising interest rate scenarios are lower that those in Base Case, and higher for declining interest rate scenarios.

The added precision delivered by the dynamic, equation based commercial loan prepayment estimates is clear in the case study example. The advantages of having this level of accuracy are best appreciated by considering the opposite situation – what if a simple 12 month rolling average is the only measure of commercial loan prepayments available?

Analysis of Commercial Loan Prepayments: The Return on Investment

As noted above, a financial manager making second quarter 2008 balance sheet decisions based on the rolling 12 average prepayment rates in the case study would be viewing an over-stated remaining term for the institution's fixed rate commercial loans and an understated liquidity contribution. Such mis-information has key negative profit implications.

Because of the overstated remaining term of the loans, unnecessary IRR caution (for example foregoing yield opportunities attainable in other longer assets or hedging with inappropriately long funding) causes a direct profit reduction. So does the holding of additional liquidity stocks or maintenance of unneeded lines of credit because of the false read on prepayment related cash flows. While the magnitude of such profit losses are institution specific, they can easily be large.

Other costs are also a factor. Because of improper term behavior estimates, loan pricing and FTP assignments are less exact. Earnings at risk and equity at risk analysis are hindered because of the model risk introduced. This undermines the Board's ability to judge the institution's true IRR position and

 © 2008 Financial Managers Society, Inc.

possibly increases regulatory scrutiny. Financial reporting is also compromised by ALM model imprecision, an issue of particular concern to publicly traded entities.

It is not difficult to envision a 1 bp reduction in net interest margin owing to poor commercial loan prepayment estimates, especially if the weakness is indicative of similar situations for other loan prepayment inputs and core deposit behavior specifications. Reversing that level of a loss by obtaining precise prepayment estimates produces earnings that are many multiples of the typical cost of even the most complex statistical based prepayment analyses.

Maintenance of Commercial Loan Prepayment Analyses

Commercial loan prepayment behaviors can change over time for many reasons, given the dynamic nature of their influences. To ensure initial and continued accuracy, a prepayment analysis maintenance program is needed. This includes regular updates, periodic monitoring, and annual formal back testing.

Updates of simple averaging type prepayment estimates should be created frequently by redefining the time series involved and recalculating the average. In internal ALM model 12 month rolling average applications, this is automatic at each model run. Equation based prepayment estimates are updated as needed by redefining the independent variables (e.g. average coupon rate, new volume rate, seasonality inputs) and reforecasting prepayments across time and rate scenarios. On a regular basis, but at least annually, the underlying statistical analysis should be re-estimated to keep the coefficients current with new data. A new study should be considered every 3 years, where a new equation system is derived from current data. This captures changes in all influences, old and new. Prepayment estimates of any type – simple average or equation based – need to be actively monitored. Each quarter, produce a comparison of prepayment levels in the last 3 months versus the estimates used. Examine the magnitude of any variances and trends over the period.

On an annual basis, extend the quarterly test to a full 12 month back test. Again, review any variances, looking for size and trends. For equation based estimates, an additional accuracy appraisal can be created. A annual “retrocast” starts with the equation (or equations) used 12 months ago, inputs actual values of all independent variables by month, and projects expected prepayments by month based on that “perfect knowledge” of the test period. Retrocasts tests are strong examinations of prepayment estimate accuracy because much of the noise in the comparisons is removed by using actual values of independent variables.

There is more information from monitoring, back tests, and retrocasts than first meets the eye. In addition to the usual focus on variances, trends in variances can reveal important commercial loan franchise information. Especially in a retrocast, where so many influences are controlled for, variances between actual prepayments and those forecast illustrate changes in current borrower behaviors

 © 2008 Financial Managers Society, Inc.

compared to history. Examining the sources of those changes can add key insights into lending operations; what is working (fewer prepayments) and what is not (higher prepayments). This is where line of business experience meets that of the finance side, with often mutually beneficial outcomes.

Segmentation Analysis of Commercial Loan Prepayment Data

The economic case for analyzing commercial loan prepayments is readily made, as illustrated above. Regulatory compliance is another value contributor. But there is still another element of value that can be gleaned from the prepayment data collected to support the prepayment analyses.

Prepayment behaviors are likely different for different borrowers. The loan level data used to create the category prepayment time series can be drilled into to provide an understanding of this phenomena. MPS calls this *loan prepayment segmentation analysis*. It is a type of data mining, but it is unique in having the category as its orientation. This is done because strategies and implementation decisions are made at the loan category level, although applied loan by loan.

Consider an example. A possible influence on commercial loan prepayments was noted above as borrower negotiating power. Assumably this would be greater for borrowers with larger balance loans. To test for this, a segmentation analysis can be conducted that compares category level historic prepayments to prepayment by only high balance loans - those in the upper 1/5 by balance size - and for loans with balances in the lower half of the size distribution (definitions are arbitrary; any set of segmentation sub-sets could be specified).

Exhibit 6 (in Appendix) illustrates the segmentation results. The data in *Exhibit 2* (in Appendix) are displayed as a line chart now, with contrasting lines for smaller and highest balance loans. Prior to August 2007, there is little difference in prepayment behaviors. After that point, however, prepayment levels for the highest balance loans accelerate. Prepayments on lower balance loans also increase, but by a smaller amount.

The segmentation outcomes ideally will point management to inquire as to the circumstances of the loan prepayment behavior patterns observed, including prepayment fee income for the periods in question. All may be well, but then again perhaps not.

Segmentation can be conducted on any loan attribute (e.g. balance, origination date, etc.) or borrower characteristic (geographic location, deposit relationships, etc.). The historic data are loaded into a system that allows free form sorts and displays outcomes that measure relative performance.

Closing Notes: Commercial Loan Prepayments

While there are limits and advantages to each type of commercial loan prepayment analysis, the only “wrong” approach is to do nothing. Key decisions

 © 2008 Financial Managers Society, Inc.

are made based on these balance sheet behavior inputs and they need to accurately defined and actively maintained.

But what if institution specific data are not available? The best source in that case is analog prepayment estimates. These are averages of the prepayment estimates produced in recent statistical analyses of peer institution experience. They embody most of the advantages of that analysis methodology but provide insights at an approximation level only. Many institutions use analog inputs as a holding strategy while they amass an adequate time series of data to support an institution specific statistical analysis.

Appendix

Exhibit 1
Key Influences on Commercial Loan Prepayments

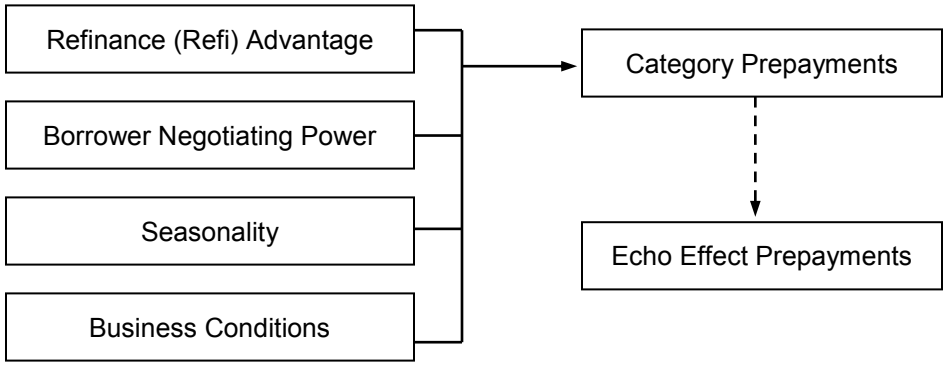

Exhibit 2
Example Historic Data: Commercial Loan Prepayments

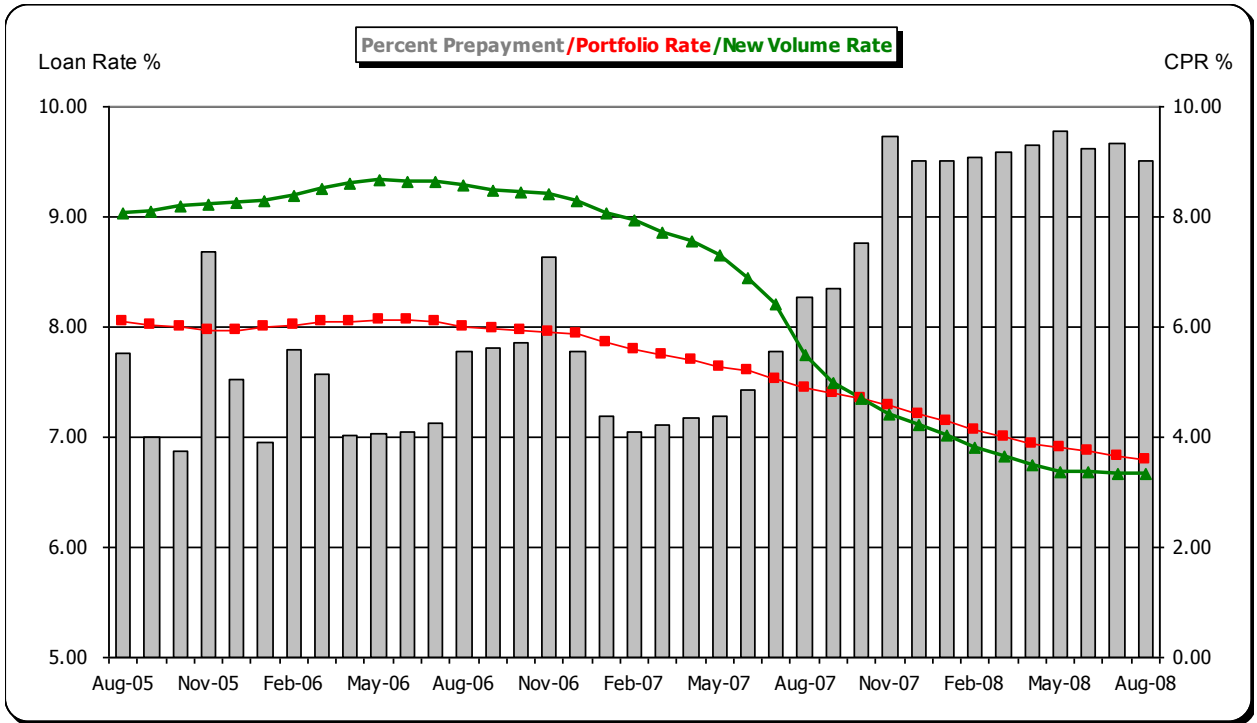

Exhibit 3

Example 12 Month Rolling Average Commercial Loan Prepayments

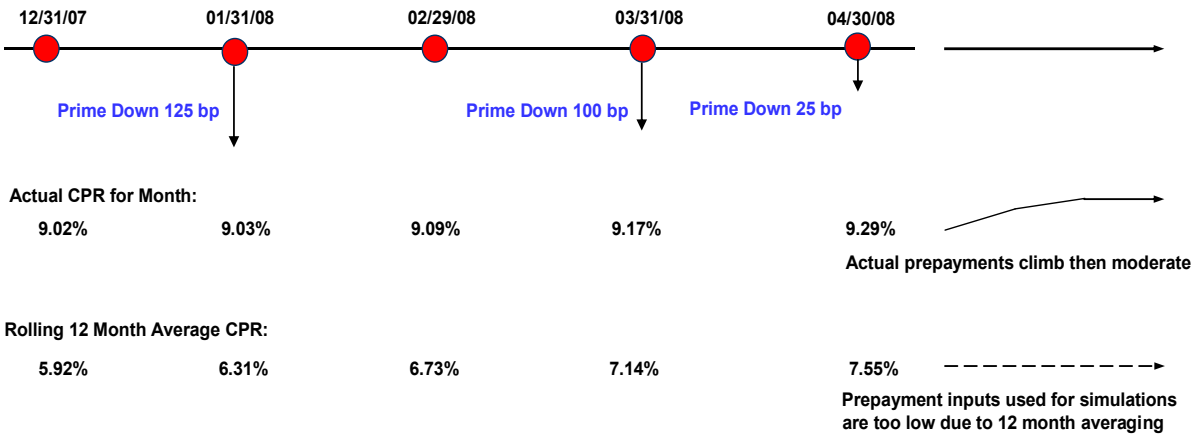

Exhibit 4

Statistical Analysis of Commercial Loan Prepayments

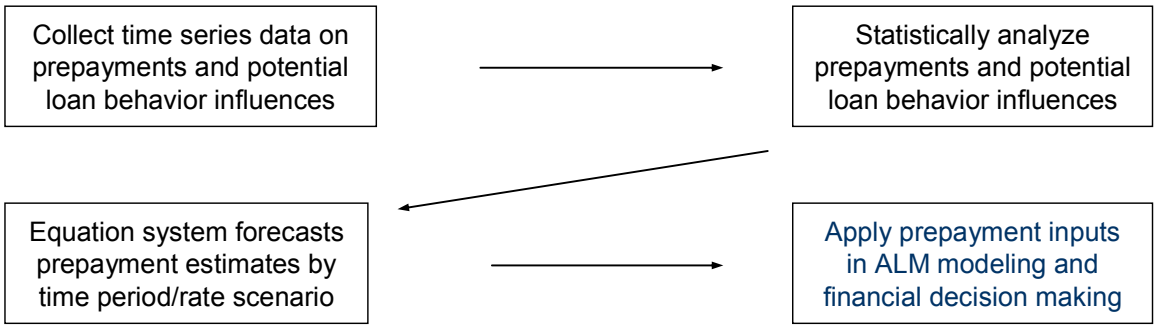

 © 2008 Financial Managers Society, Inc.

Exhibit 5
Example Equation Based Forecasts of Commercial Loan Prepayments

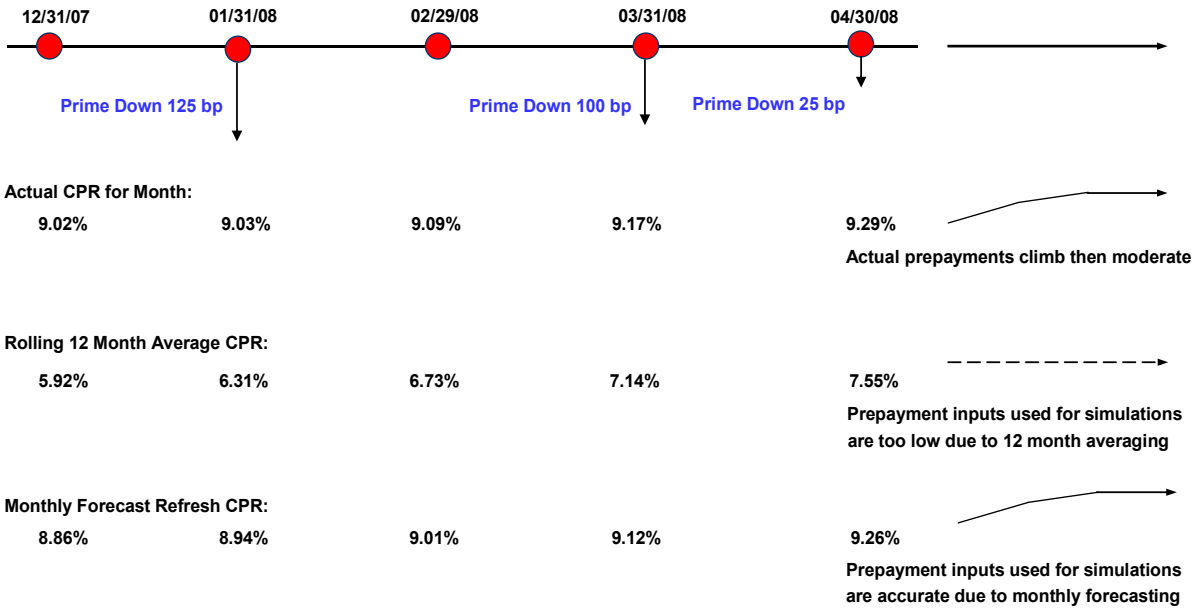

Exhibit 6
Segmentation on Commercial Loan Prepayments by Balance Size

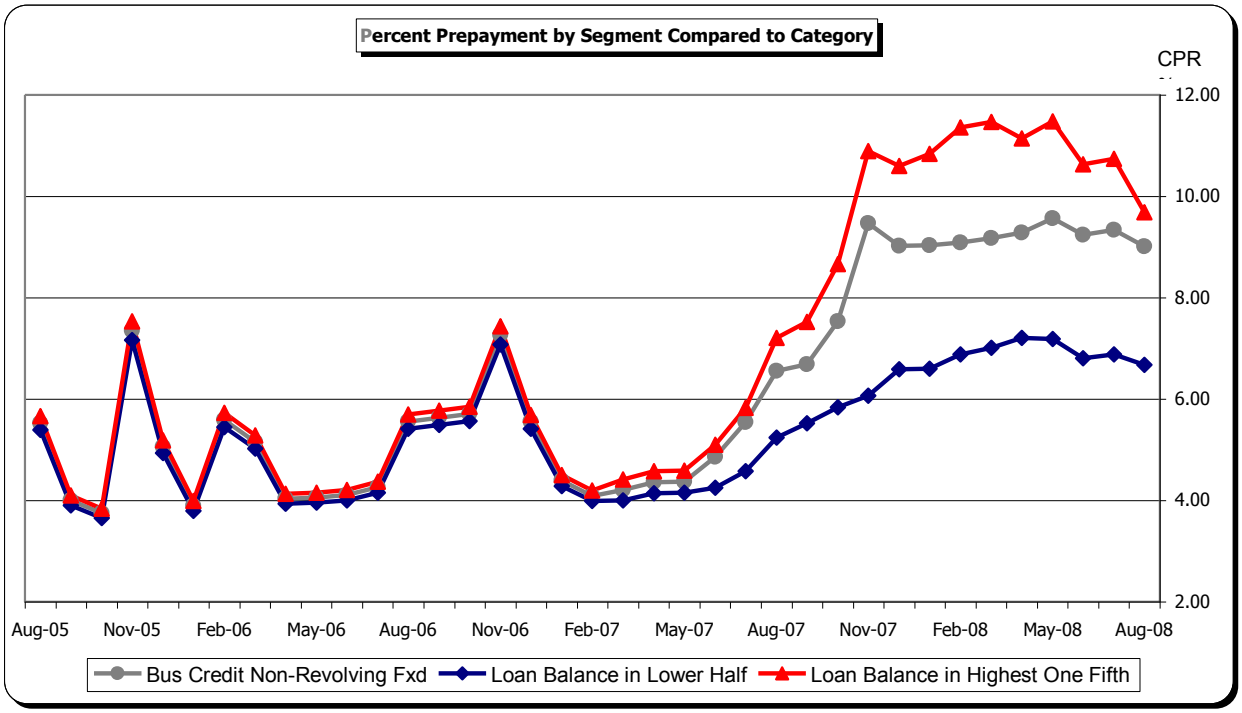

 © 2008 Financial Managers Society, Inc.

Published by:
Financial Managers Society, Inc.
100 W. Monroe, Suite 810
Chicago, IL 60603
312-578-1300
info@fmsinc.org
www.fmsinc.org

 © 2008 Financial Managers Society, Inc.